Proceedings of the American Control Conference
Chicago, Illinois • June 2000

Reduction of a Wave-Variable Biological Arm Control Model

Sridevi V. Sarma, Steve Massaquoi
Munther Dahleh
Laboratory of Information and Decision Systems
Massachusetts Institute of Technology
sree@mit.edu, sgm@mit.edu

Abstract

[1]This paper describes a systematic approach to reducing the order of a recently proposed biological arm control model. The single-joint Wave Variable Intermediate Cerebellar Arm Control Model (WVICACM), developed by Massaquoi [9, 10] on the basis of previous work by Neimeyer and Slotine [13], proposes that the cerebellum enables stable linear servo control of simple arm movements in the presence of neural signal transmission delays via a transformation of variables. A reduction strategy based on balanced truncation was applied to the WVICACM, which generated reduced order models as a function of the WVICACM parameters. While being analytically much simpler than the WVICACM, these approximate models retain a very large portion of its stability and performance characteristics over a wide range of parameter values, including those which render the WVICACM unstable. The strategy employed here may be generally useful for retaining the excellent model matching capabilities of the balanced truncation method in situations where the original system is potentially not stable.

1. Introduction

Although much is known about the anatomy and physiology of the primate motor system, its design from a control engineering viewpoint has not been established. In particular, the relative importance of feedforward vs. feedback control in voluntary limb movements remains in debate. It is clear empirically that natural movement control employs feedback information to some extent [15]. On the other hand, motor control signals are subject to neural signal transmission times on the order of tens of milliseconds, and the low-pass filtering characteristics of muscle activation add additional delays that are potentially destabilizing. It has therefore been proposed by many that the central nervous system must employ significant amounts of feedforward control and/or forward internal models as observers/predictors (e.g. [14, 12]).

Central to most detailed models of low-level voluntary movement control are models of the cerebellum. The cerebellum serves as a coordinator of motor movements for all animals that require generation of quick and accurate motion. Lesions of the cerebellum produce disturbances in limb coordination, timing of movements, muscle tone, posture, and motor learning [7, 5]. From a control engineering perspective, it can be easily argued that the cerebellum functions at least in part as an adaptive controller. The extent to which it functions primarily as continuous vs. table look-up controller, a feedforward vs. feedback controller, or an indirect vs. direct adaptive controller, is argued differently by various investigators. Several conceptions including those of Marr, Albus, Miall, Kawato, Gomi, Ito, Houk, Kettner, Paulin, Schweighofer and Massaquoi have been reviewed recently by Massaquoi and Topka [11].

The Wave-Variable Intermediate Cerebellar Control Model (WVICACM) proposed by Massaquoi and Slotine [9] suggests that the primate voluntary limb control system is best described as a fairly simple stabilized servo. This model and its extensions [10] posit a largely feedback-dependent mode in spite of the various signal transmission delays. It is argued that this is possible because command and sensory feedback signals are recoded as in certain force-reflecting teleoperators [13]. Physiological evidence in terms of neural recordings in primate cerebellum has been cited in support of this hypothesis [9]. Advanced versions of this model [10] appear to account for several features of voluntary arm movement control, and dyscontrol following damage to the cerebellum.

Despite its relative simplicity, the WVICACM, which describes control of a single-joint actuated by a very simple muscle model, contains 25 states after replacing internal delays with first-order Pade approx-

[1]This research has been supported by NSF IBN-9873478.

imants. While this dimension is not problematic for simulations of isolated single-joint motion, a reduced order model would be useful for a number of purposes. For example, we anticipate increasing interest in the development of large scale multi-joint or even multisystem hierarchical human motor control models. Because of the potential complexity of such systems, at least preliminary models may profitably consist of appropriate assemblies of simple single-joint models of the type described in this paper. From a computational perspective any reduction in overall model complexity would be especially useful for simulations of motor learning or adaptation which typically requires many iterations of modeled movements.

2. Single-Joint WVICACM

The WVICACM proposes that the cerebellum and spinal cord in conjunction with the cerebral motor cortex and the plant (such as the one or two-joint arm [2]) act as a teleoperation system. Teleoperation systems are often described in terms of a "master", which transmits commands through a communication channel involving a delay to a "slave". Information from the slave site may be fed back to the master via the same link (Figure 1). In many two-way communication systems, transmission delays impose limitations on both performance and stability. However, wave-variable transformation of the channel signals, described below, may allow teleoperation systems to remain stable under all transmission delays.

Wave variable transformations [13] are particular linear recombinations of input and output signals that allow the passivity condition of a system to be expressed without concern for the phase relationship between these signals. Recall that a real SISO system, with input $\dot{x} \in R$ and output $F \in R$, can be said to be *passive* if for all $t \geq 0$

$$\int_0^t \dot{x} F d\tau \geq 0. \tag{1}$$

Note that the transformation of variables is such that

$$u = \frac{b\dot{x} + F}{2\sqrt{b}}, \quad v = \frac{b\dot{x} - F}{2\sqrt{b}}, \tag{2}$$

where b is an arbitrary positive constant. This enables the passivity condition in equation (1) to be rewritten in terms of the magnitudes of the *wave variables* u and v as

$$\int_0^t (|u|^2 - |v|^2) d\tau \geq 0 \tag{3}$$

[2]Refer to [9, 10] for details of single and two joint tasks and corresponding system outputs θ_s.

for all $t \geq 0$. Now consider the teleoperation system shown in Figure 1, consisting of a 2-port communication link connected to an arbitrary slave system. The communication link has an input vector $\dot{\mathbf{x}} = (\dot{x}_m, -\dot{x}_s)^T$ and output vector $\mathbf{F} = (F_m, F_s)^T$, and is passive if for all $t \geq 0$

$$\int_0^t \dot{\mathbf{x}}^{\mathbf{T}} \mathbf{F} d\tau = \int_0^t (\dot{x}_m F_m - \dot{x}_s F_s) d\tau \geq 0. \tag{4}$$

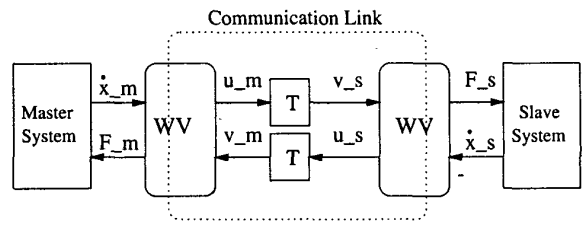

Figure 1: Wave Variable Teleoperation System

If in particular, the communication link consists of two wave variable (WV) transformers cascaded via a pure delay T, as shown in Figure 1, then condition (4) can be rewritten in terms of only the wave variables u_m and u_s (note that $v_s = u_m(t-T)$ and $v_m = u_s(t-T)$) as follows

$$\int_0^t (\dot{x}_m F_m - \dot{x}_s F_s) d\tau = \left[\int_0^t u_m^2 d\tau - \int_0^t u_s^2(t-T) d\tau\right] - \left[(\int_0^t u_m^2(t-T) d\tau - \int_0^t u_s^2 d\tau.\right] \geq 0.$$

The inequality can be reduced to

$$\int_{t-T}^t (|u_m|^2 + |u_s|^2) d\tau \geq 0,$$

which holds for all $t \geq 0$ irrespective of the delay T. In this case the communication link is always passive. It is easily shown that if the link is connected to a slave system via a negative feedback configuration as in Figure 1, the overall system, when viewed as a 1-port system with input $\dot{x}_m$ and output F_m (*i.e.*, from the master), is also passive if the slave is passive [13].

The WVICACM, shown in Figure 2, consists of a wave-variable teleoperation system of the type shown in Figure 1 (shaded portion of Figure 2)[3], along with additional pathways (unshaded) that correspond to a non-stabilized, extracerebellar cerebellar servo system. It is proposed that the cerebral cortex receives position (θ_s) (via the dorsal columns) and approximate position (θ_{md}) information, along with a cerebrally-derived reference trajectory (θ_{ref}), and combines the signals to generate a velocity command

[3]The shaded portion of Figure 2 contains brain and peripheral delays at the output and input sites of the master and slave respectively, which in theory may render the system unstable. However, these delays are physiologically small in healthy humans, and therefore do not disturb stability of the WVICACM.

signal ($\dot{\theta}_m$). The intermediate cerebellum, processes the wave variables $\dot{\theta}_m$ and $u_s(t-T)$ to produce the wave variable u_m which descends the spinal cord via the corticospinal tract or the rubrospinal tract. The spinal cord processes delayed versions of u_m, N_s and $\dot{\theta}_s$ to generate the alpha motor neuron command signal α, which undergoes a peripheral delay before it enters the plant (single joint arm). Note that the plant here, which consists essentially of spring-like muscles and masses, can be considered under most circumstances to be a passive system. Biological sensors, such as the muscle spindles and golgi tendon organs, measure the muscle lengths, rate of stretch, and tensions respectively and send this to the brain via the spinal cord.

The variables in Figure 2 are defined as:

- $T_{br,sp,pr}$ = brain, spinal cord, and peripheral transmission delays
- θ_m = commanded "master" angular position
- θ_s = actual "slave" angular position
- α = alpha motor neuron command signal
- N_s = the torque applied at the slave site
- u_m, u_s, $\dot{\theta}_{sd}$, and $\dot{\theta}_{md}$ = wave variables

These variables are described by:

- $u_s = -2N_s(t-T_{pr}) + u_m(t-T_{sp})$
- $\dot{\theta}_{sd} = \eta_1(-N_s(t-T_{pr}) + u_m(t-T_{sp}))$
- $u_m = \eta_2(B_m c_k c^{-1}\dot{\theta}_m(t-T_{br}) + K_m c_k c^{-1}\theta_m(t-T_{br}) - K_m\theta_{md}) + \eta_3 u_s(t-T_{sp})$
- $\dot{\theta}_{md} = \eta_4(B_m c_k c^{-1}\dot{\theta}_m(t-T_{br}) + K_m c_k c^{-1}\theta_m(t-T_{br}) - K_m * \theta_{md}) + u_s(t-T_{sp}))$
- $\dot{\theta}_m = \theta_{ref} - c\theta_{md}(t-T_{br}) - (c_k*(1-c))\theta_s(t-T_{br}-T_{sp}-T_{pr})$
- $\alpha = \theta_{sd} - (B_s/K_s)(\dot{\theta}_s(t-T_{pr}) - \dot{\theta}_{sd}) + (c_k*(1-c))(\dot{\theta}_m(t-T_{br}-T_{sp})$

where $\eta_1 = \frac{1}{b}$, $\eta_2 = \frac{2b}{b+B_m}$, $\eta_3 = \frac{b-B_m}{b+B_m}$, $\eta_4 = \frac{1}{b+B_m}$, with b, B_m, and K_m are arbitrary positive constants. Note that b is the constant used in the wave variable transformation (see equation (2)). Finally, the transfer function from $\alpha(t-T_{pr})$ to θ_s (the plant) is taken to be

$$\frac{\theta_s(s)}{\alpha(s)e^{-sT_{pr}}} = \frac{K_{musc}\rho^2}{(Hs^2+B_{musc}s+K_{musc})(s+\rho)^2},$$

and the torque feedback is $N_s(s) = K_{musc}(\frac{\rho^2\alpha(s)e^{-sT_{pr}}}{(s+\rho)^2} - \theta_s(s))$. H is the moment of inertia of the moving limb segment, and K_{musc} and B_{musc} are the muscular angular stiffness and viscosity, respectively. The parameter $c \in [0,1]$ is used to model the balance of information that flows to the cerebrum via the cerebellum and the spinal cord versus that which flows directly from the plant to the cerebrum. Finally, the transcortical sensorimotor gain is denoted as c_k. See [10] for details.

3. Model Reduction

Although the WVICACM appears to be useful for modeling several features of human limb control, for some purposes it is inconvenient. It contains delays that contribute significantly both to the appropriate lag in its response to commands as well as to the dynamics of the lagged response. Because of these delays, the transfer function from θ_{ref} to θ_s is irrational and hence has an infinite dimensional state space representation. Therefore as a first step, we replaced the delays with first order Pade approximants to obtain a 25th order approximation to the infinite dimensional WVICACM. Because the delays, T_{sp}, T_{pr}, and T_{br}, are physiologically small they are very well approximated by the rational Pade functions and the 25th order model mimics the WVICACM almost perfectly. Further reduced order models are therefore compared with the 25th order model.

For reasons discussed in section 1, further simplification of the WVICACM is desirable to the extent that this can be achieved without significant loss of model fidelity. Despite the various nonlinearities and other complexities in the components of actual human/primate arms, second-order linear models of overall limb control have been used frequently and with some success [8]. Although these simple models do not fully capture limb behavior, presumably both because of their linearity and their inadequate representation of delay-related dynamics, they suggest that other relatively low order models might be quite useful.

Our principal objective is to compute reduced versions of the WVICACM that are able to model healthy voluntary arm movement control, and dyscontrol following damage to the cerebellum. Specifically, we seek models which

- accurately follow step responses of the full model and
- which capture the stability characteristics of full model as its parameters are varied.

To follow step responses accurately, the reduced models must match the full model well at low frequencies. To capture the stability characteristics of the full WVICACM, the reduced models should have comparable gain and phase margins if the full model is stable or, they should match the gain and phase well at least up to the frequency at which the phase of the full model is -180 degrees.

Some parameter values, especially those pertaining to markedly reduced cerebellar function yielded unstable closed loop systems. The balanced truncation method cannot be applied directly to the closed loop system in these situations [16]. However, if the WVICACM is rewritten as a forward system $G(s;\mathbf{p})$

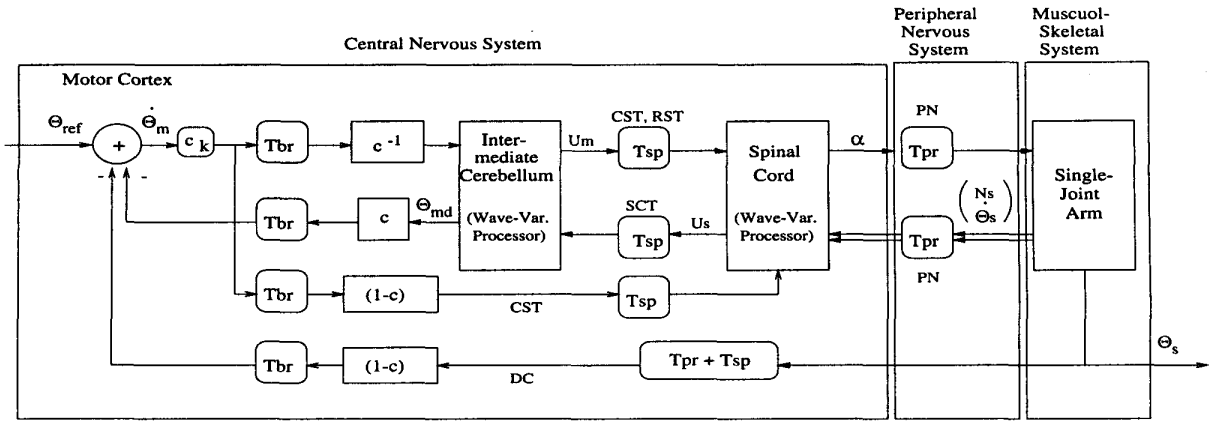

Figure 2: Primate Motor Control System Model (WVICACM); Descending pathways: CST= corticospinal tract, RST = rubrospinal tract, PN = peripheral nerves. Ascending pathways: SCT= spinocerebellar tracts (rostral and ventral), DC = dorsal columns.

(where $\mathbf{p}$ is a vector of the model parameters), that is enclosed by a feedback loop which contains a simple gain and delay (Figure 3), we can address the reduction of $G(s;\mathbf{p})$ alone. Specifically, for parameters that result in stable $G(s;\mathbf{p})$, balanced truncation can be applied to reduce the forward system to $\hat{G}(s;\mathbf{p})$. If $\hat{G}(s;\mathbf{p})$ captures the frequency response of $G(s;\mathbf{p})$ at the appropriate frequencies (mentioned above), the closed loop step responses should be fairly accurate even if the original closed-loop system is moderately unstable.

Stability of the WVICACM is most sensitive to c, since this parameter trades off the amount of stabilized (transcerebellar) vs. non-stabilized extracerebellar feedback control. For this paper, sets of reduced models of $G(s;\mathbf{p})$ were obtained as a functions of c only, with the remaining parameters in $\mathbf{p} = [b, B_m, K_m, T_{sp}, T_{pr}, T_{br}]$ fixed at the nominal values used in [9]. Specifically, balanced truncation was used to generate four sets of models of order n: $\hat{G}_n(s,c), n = 3,4,5,6$. Within each set, c ranged from 0.1 to 0.9. These reduced forward models lead to (n+1)th order closed loop systems.

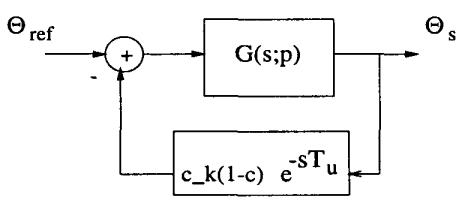

Figure 3: Reformulated Representation of WVICACM where $T_u = T_{br} + T_{sp} + T_{pr}$.

To asses the validity of the reduced models, we compared closed loop step responses of the 25th order WVICACM to those of the lower order models. As shown in Figure 4, the principle goal identified above is met for even the 4th order closed loop model (employing a 3rd order $\hat{G}(s;c)$). The step responses of the 4th order models match those of the full WVICACM extremely well, regardless of whether or not the closed loop system is stable. Step responses of the remaining lower order models derived here (5-7th order) fall in between those of the 25th and 4th order models as best shown in the bottom plot of Figure 4. Our results reproduce those of the full WVICACM presented in [9].

Limited exploration of other model reduction methods was performed. For example, the Arnoldi reduction algorithm [1] and approximation of the frequency response via cancellation of nearby poles and zeros were also applied to the WVICACM. The Arnoldi approximations were not as accurate (in terms of frequency and step response) as the reduced models obtained via cancellation of poles and zeros, perhaps because the Arnoldi algorithm was used to obtain an approximation only around a particular frequency (we chose to approximate the system around zero frequency). It should be noted, however, that the Arnoldi algorithm is typically useful for simplifying very large systems on the the order of thousands of states and hence is not entirely appropriate for reducing the WVICACM. The method of cancelling neighboring poles and zeros does not allow one to choose the order of the approximation, since different parameter values may result in a different number of nearby poles and zeros. Balanced truncation, on the other hand, offers a systematic algorithm for reducing a system to any desired order and it simultaneously provided better reduced fits to the full WVICACM

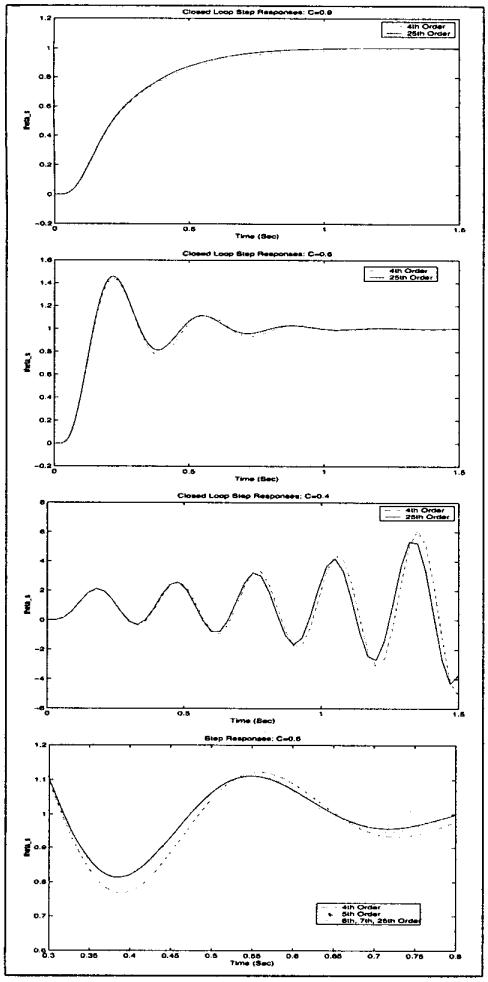

Figure 4: Closed Loop Step Responses

than either of the above methods.

4. Conclusions & Future Work

This paper describes a recently proposed biological arm control model and several reduced order approximations. The essential strategy was to apply balanced truncation only to the forward transfer function which is dominated by the passive wave-variable teleoperator dynamics, and to close the potentially destabilizing direct feedback loop secondarily. In this way, reduced models were obtained that approximated the original system well irrespective of whether it was stable or unstable. This feature is especially important for modeling physiological motor systems in which the development of instability (tremor) can be seen in natural pathological circumstances. The reduction technique relied on the observation that the forward transfer function is in practice stable for physiologically sensible parameter values so long as T_{br} and T_{pr} are normal (*i.e.* fairly small). In certain disorders such as multiple sclerosis and peripheral neuropathy [2], intra-brain or peripheral neural conduction, respectively, may be slowed considerably. In these situations $G(s;p)$ is not necessarily stable and a further reformulation of the system in terms of stable subcomponents would be necessary. This is a problem for future work.

Unlike existing low-order models of limb behavior [8], the reduced models presented here are derived from a model (the WVICACM) that contains details of the internal structure of the motor control apparatus. Therefore, these reduced models inherit dynamics associated with specific alterations in internal physiology. As such they can be used to model and analyse these behaviors more efficiently. Our preliminary simulations indicate that over a fairly wide range of stabilities, a 6th order model captures the behavior of the WVICACM almost perfectly, while a 4th order model performs quite well for many practical purposes. For this reason, we did not pursue extensively other model reduction techniques.

References

[1] Silveira, M. etal., "A Coordinate-Transformed Arnoldi Algorithm for Generating Guaranteed Stable Reduced-Order Models of RLC Circuits" *ICCAD*: 1996.

[2] "Clinical Neurology", (A.B. Baker, L.H. Baker, eds) *J.B. Lippincott Company*: Philadelphia, 1990

[3] Bizzi, E., Abend, W.K., "Control of multi-joint movement" *Comparative neurobiology, modes of communication in the nervous system*: pp 255-277, 1985.

[4] Franklin, G. etal., "Feedback Control of Dynamic Systems," *Addison-Wesley Publishing Company*: 1991.

[5] Ito, Masao, "The Cerebellum and Neural Control", *Raven Press*: 1984.

[6] Kawato, M., "A Hierarchical Neural-Network Model for Control and Learning of Voluntary Movement, " *Biological Cybernetics*: v57, 169-185, 1987.

[7] Kandel, E.R., "Principles of Neural Science", *Elsevier/North-Holland*: 1981.

[8] Lacquaniti, F. etal., "The Mechanical Behavior of the Human Forearm in Response to Transient Perturbations", *Biol. Cybernetics*: 44, 35-46, 1982.

[9] Massaquoi, S.G., Slotine, J.E., "The Intermediate Cerebellum May Function As A Wave-Variable Processor," *Neuroscience Letters* : 60-64, 1996.

[10] Massaquoi, S.G., "Modeling the Function of the Cerebellum in Scheduled Linear Servo Control of Simple Horizontal Planar Arm Movements1," *M.I.T. PhD* : 1999.

[11] Massaquoi, S. G., Topka, H. "Models of Cerebellar Function" In: The Cerebellum and Its Disorders, (M. Manto and M. Pandolfo eds.), *Cambridge University Press*: (in press) 2000.

[12] Miall, R.C. "Is the Cerebellum a Smith Predictor?" *J Mot Behav*: 25, 1993.

[13] Niemeyer, G., "Using Wave Variables in Time Delayed Force Reflecting Teleoperation", *M.I.T. PhD*: 1996.

[14] Paulin, M.G. "Neural representations of moving systems", in The Cerebellum and Cognition *J.D. Schmahmann, Editor*: 515-533 1997.

[15] Polit, A., Bizzi, E. "Processes Controlling Arm Movements in Monkeys" *Science*: 102, 1235-1237, 1978.

[16] Wang, W., Doyle, J. etal. "Model Reduction of LFT Systems" *Proc. of CDC*: 1233-1238, 1991.

[17] Zhou, K, Doyle, J., Glover, K., "Robust Optimal Control", *Prentice Hall, NJ*: 1996.